FRAMELESS DOOR STYLE

AGW

Acrylic Gloss White

SSO

Silm Shaker Oak

AGG

Acrylic Gloss Gray

UWB

Urbanflat Walnut Brown

UWT

Urbanflat Walnut Taupe

UON

Urbanflat Oak Natural

FRAMELESS CABINETS

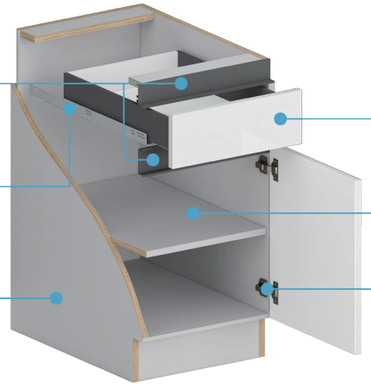

Square Cabinetry

Wholesale: 13211 Florence Ave, Santa Fe Springs, CA 90670 Office: (562)777-1535

Https://www.sqcabinetry.com service@sqcabinetry.com

Square Cabinetry

THE BEST PRICE-PERFORMANC RATIO IN TOWN

FACTORY DIRECT

We only sell high quality cabinets with fashion design And provide quality service.
We use plywood with melamine surface for box.
Melamine is durable, fire resistant, impervious to water, stain resistant, and can be safely cleaned with strong household solutions. As a shelf or cabinet lining, it wipes clean easily.

PRODUCTS - FRAMELESS CABINETS

WALL CABINETS

W0930 W0936 W0942
W1230 W1236 W1242
W1530 W1536 W1542
W1830 W1836 W1842
W2130 W2136 W2142

W2430 W2436 W2442
W2730 W2736 W2742
W3030 W3036 W3042
W3330 W3336 W3342
W3630 W3636 W3642
W3930 W3936 W3942
W4230 W4236 W4242

PD30
*.Available for 30"width

EPD30
*.Avaliable for 30" width &
36" to 42" Height"

W3012 W3612
W3015 W3615
W3018 W3618
W3021 W3621
W3024 W3624

W361224
W361524
W361824
W362124
W362424

WBC2730 WBC3030
WBC2736 WBC3036
WBC2742 WBC3042

WDC2430
WDC2436
WDC2442

WER3030
WER3036
WER3042

WLU3015 WLU3615
WLU3018 WLU3618
WLU3021 WLU3621
WLU3024 WLU3624

WLU3030 WLU3630
WLU3036 WLU3636
WLU3042 WLU3642

W1530GD W1830GD
W1536GD W1836GD
W1542GD W1842GD

W3030GD W3630GD
W3036GD W3636GD
W3042GD W3642GD

WLU3015GD WLU3615GD
WLU3018GD WLU3618GD
WLU3021GD WLU3621GD
WLU3024GD WLU3624GD

WLU3030GD WLU3630GD
WLU3036GD WLU3636GD
WLU3042GD WLU3642GD

BASE CABINETS

B12
B15
B18
B21

B24 B36
B27 B39
B30 B42
B33

BF09
BF12
BF15
BF18
BF21

POS18
*.Available for BF18

BF24 BF36
BF27 BF39
BF30 BF42
BF33

POS18 x 2
*.Available for BF36

DB15-2 DB27-2
DB18-2 DB30-2
DB21-2 DB33-2
DB24-2 DB36-2

DB12-3 DB27-3
DB15-3 DB30-3
DB18-3 DB33-3
DB21-3 DB36-3
DB24-3

BBCF42
BBCF45

BCO42L/R

HMO45L/R
*Available for BBCF45"

FSB33
FSB36

DS16

BSR09
BSR12
BSR15
BSR18

SB33
SB36

SB36-2

TB18

BER33
BER36
BER39

3LS33
3LS36

BST39

BDT39

TALL CABINETS

PC1584FD PC1884FD
PC1590FD PC1890FD
PC1596FD PC1896FD

SO1884
*.Available for 18"width

PC2484FD PC3684FD
PC2490FD PC3690FD
PC2496FD PC3696FD
PC3084FD
PC3090FD
PC3096FD

SO1884 x 2
*.Available for 36"width

PC1584D2 PC1884D2
PC1590D2 PC1890D2
PC1596D2 PC1896D2

PO1550, PO1850

PC2484D2 PC3684D2
PC2490D2 PC3690D2
PC2496D2 PC3696D2
PC3084D2
PC3090D2
PC3096D2

PO1550, PO1850
*.Available for 30"& 36"width

PC1584D3 PC1884D3
PC1590D3 PC1890D3
PC1596D3 PC1896D3

PO1550, PO1850
*.Available for 18"width

PC2484D3 PC3684D3
PC2490D3 PC3690D3
PC2496D3 PC3696D3
PC3084D3
PC3090D3
PC3096D3

PO1550, PO1850
*.Available for 30"& 36"width

PC1584T PC1884T
PC1590T PC1890T
PC1596T PC1896T

PO1550, PO1850

PC2484T PC3684T
PC2490T PC3690T
PC2496T PC3696T
PC3084T
PC3090T
PC3096T

PO1550, PO1850
*.Available for 30"& 36"width

OC2484D OC3084D
OC2490D OC3090D
OC2496D OC3096D

OC2484S-D2 OC3084S-D2
OC2490S-D2 OC3090S-D2
OC2496S-D2 OC3096S-D2

OC2484S-D3 OC3084S-D3
OC2490S-D3 OC3090S-D3
OC2496S-D3 OC3096S-D3

OC2484S-ET OC3084S-ET
OC2490S-ET OC3090S-ET
OC2496S-ET OC3096S-ET

ACCESSORIES

WFB330
WFB336
WFB342
WFB630
WFB636
WFB642
BFB3
BFB6
TFB396
TFB696

*.Flush & match the box

WF330 TF384
WF336 TF390
WF342 TF396
WF630 TF684
WF636 TF690
WF642 TF696
BF3
BF6

*.Flush & match the Door

MSM

4 7/8" TK8

3/4" WSP30
WSP36
WSP42
TSP96
RRP96
BSP

2" WSP233
WSP239
WSP245
BSP2

3/4" ISP25

2" ISP225

3/4" PNL3496

12" 13" S36
S42
S48

E-ROT12D E-ROT27D
E-ROT15D E-ROT30D
E-ROT18D E-ROT33D
E-ROT21D E-ROT36D
E-ROT24D

E-ROT12B E-ROT27B
E-ROT15B E-ROT30B
E-ROT18B E-ROT33B
E-ROT21B E-ROT36B
E-ROT24B

DTK15 DTK27
DTK18 DTK30
DTK21 DTK33
DTK24 DTK36

VANITY CABINETS

WV24
WV30

WV36

WV42
WV48

WV54
WV60

WV60D